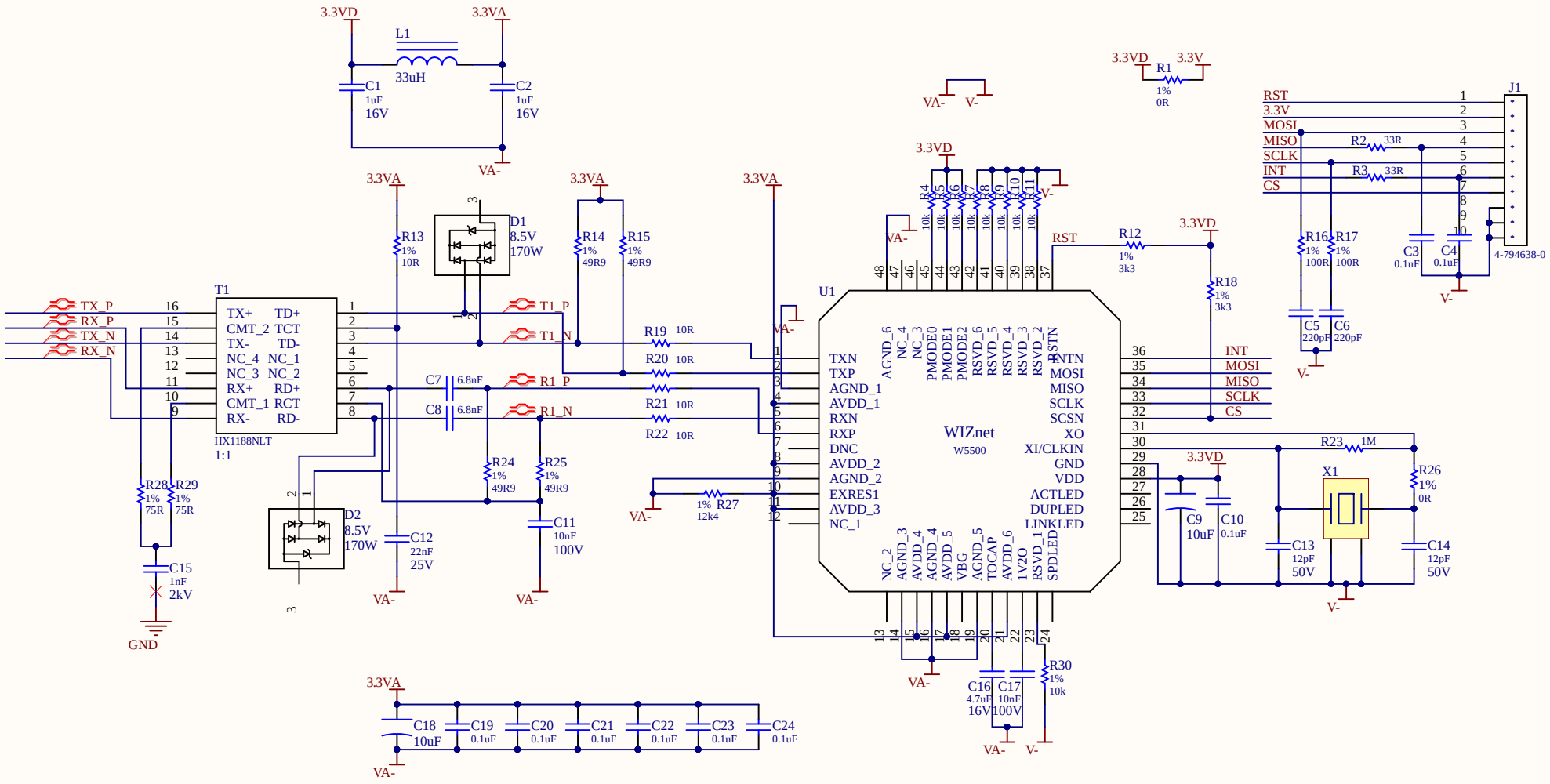


| Title | | |
|---|---|---|
| Size A4 | Number | Revision |
| Date: 2023-04-21 | | Sheet of |
| File: \\..\W5500.SchDoc | | Drawn By: |

| Comment | Description | Designator | Footprint | LibRef | Quantity |
|---|---|---|---|---|---|
| Capacitor | Part can be substituted upon TDG approval, Part can be substituted upon TDG approval, Part can be substituted upon TDG approval, Part can be substituted upon TDG approval, [NoValue], [NoValue], Part can be substituted upon TDG approval, Part can be substituted upon TDG approval, [NoValue], [NoValue], Part can be substituted upon TDG approval, Part can be substituted upon TDG approval, Part can be substituted upon TDG approval, Part can be substituted upon TDG approval, Part can be substituted upon TDG approval, Part can be substituted upon TDG approval, Part can be substituted upon TDG approval | C1, C2, C3, C4, C7, C8, C10, C11, C12, C16, C17, C19, C20, C21, C22, C23, C24 | CAPC1608X09N | C143, C143, C003, C003, C219, C219, C003, C001, C218, C220, C001, C003, C003, C003, C003, C003, C003 | 17 |
| Capacitor | Part can be substituted upon TDG approval, Part can be substituted upon TDG approval, [NoValue], [NoValue] | C5, C6, C13, C14 | CAPC2012X25N | C214, C214, C217, C217 | 4 |
| Capacitor Polarity | Part can be substituted upon TDG approval | C9, C18 | CAPC6032X28N | C200 | 2 |
| Capacitor | Part can be substituted upon TDG approval | C15 | CAPC3216X16N | C106 | 1 |
| Diode Transient Bi_1 | | D1, D2 | Diode 3-XDFN | D182 | 2 |
| 4-794638-0 | | J1 | CON4-794638-0 | J210 | 1 |
| Inductor | | L1 | Inductor SRN5020TA | L219 | 1 |
| Resistor | Jumper Part can be substituted upon TDG approval | R1 | RESC6331X07N | R572 | 1 |
| Resistor | Part can be substituted upon TDG approval | R2, R3, R12, R16, R17, R18, R23 | RESC2012X05N | R349, R349, R219, R506, R506, R219, R190 | 7 |
| Resistor | Part can be substituted upon TDG approval | R4, R5, R6, R7, R8, R9, R10, R11, R13, R14, R15, R19, R20, R21, R22, R24, R25, R30 | RESC1608X06N | R121, R121, R121, R121, R121, R121, R121, R121, R127, R548, R548, R127, R127, R127, R127, R548, R548, R121 | 18 |
| Jumper | Part can be substituted upon TDG approval | R26 | Jump2012X05N | R618 | 1 |
| Resistor | Part can be substituted upon TDG approval | R27, R28, R29 | RESC3216X06N | R175, R456, R456 | 3 |
| HX1188NLT | | T1 | HX1188NLT | L218 | 1 |
| W5500 | Ethernet Controller 10/100 Base-T/TXPHY SPI Interface 3.3V 132mA 48-LQFP RoHS | U1 | QFP50P900X900X160-48N | U178 | 1 |
| Manufacturer PN | 25MHz Crystal | X1 | 4-SMD CRYSTAL | U179 | 1 |