FIELD SYSTEM ETHERNET CONNECTION

RevNo	Revision note	Date	Signature	Checked

W5100 wiznet ETHERNET

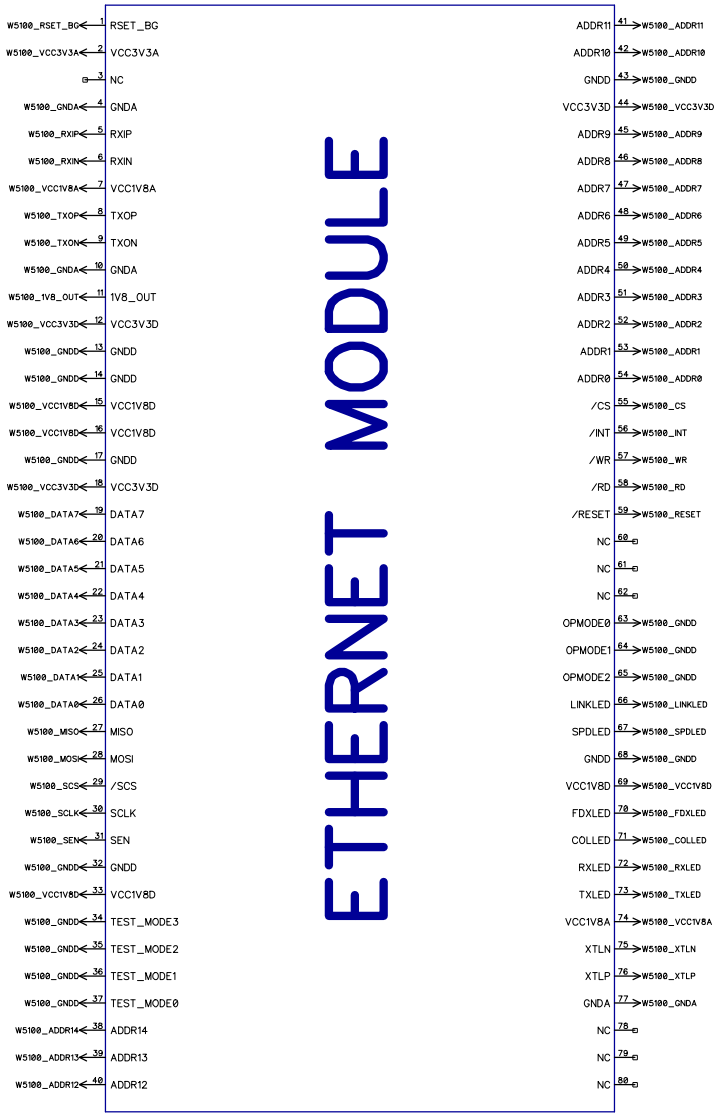

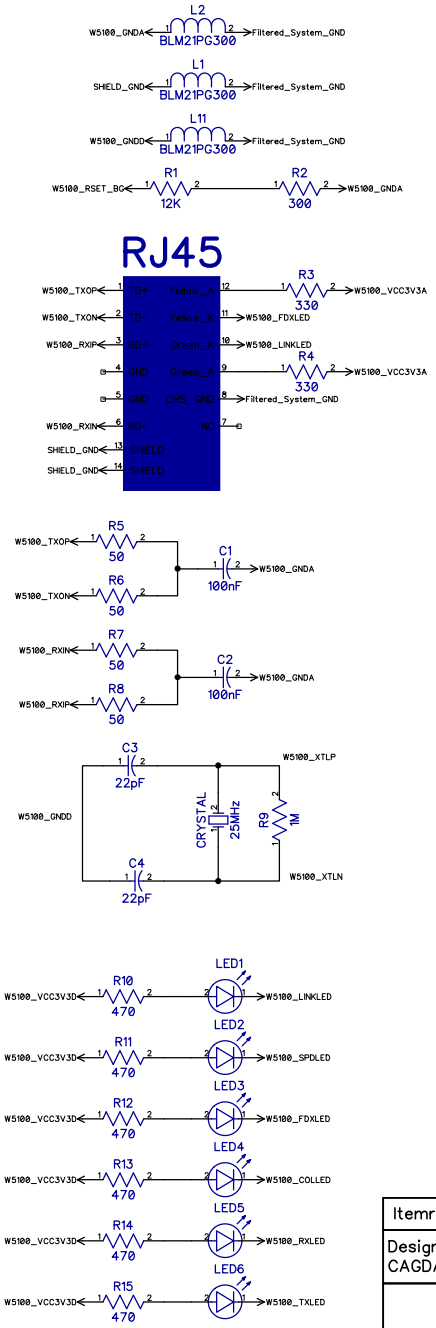

1V8 FILTERED OPERATION

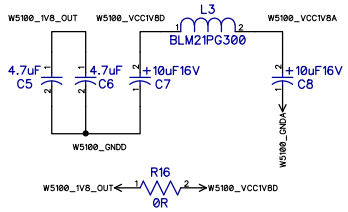

3V3 FILTERED OPERATION

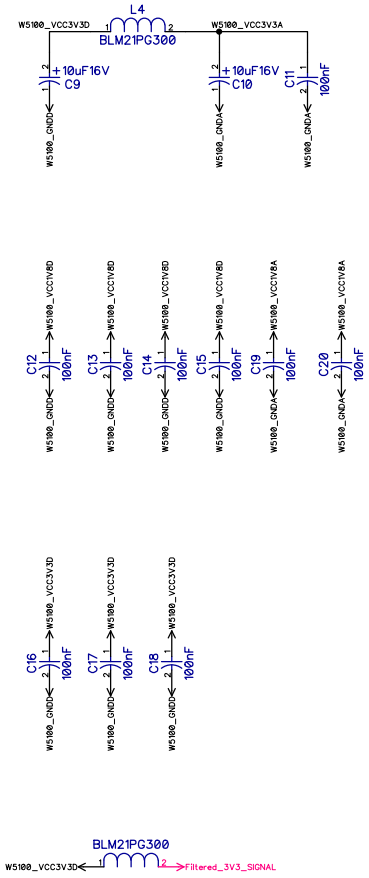

DEFAULT PIN ASSIGNMENT

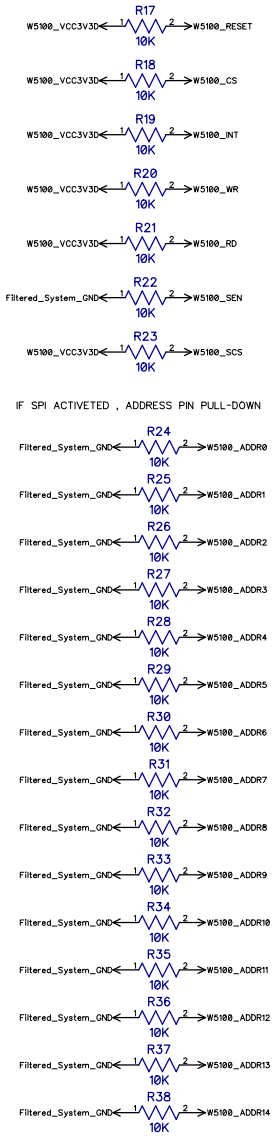

Itemref	Quantity	Title/Name, designation, material, dimension etc		Article No./Reference	
Designed by CAGDAS ELCAN		Checked by C.CAN UGUR &CAGDAS ELCAN	Approved by - date - 00/00/00	File name	Date 05/07/14	Scale 1:1
					Edition 0	Sheet 1/1